Types of Frequency Modulation

FM (Frequency Modulation)

Narrowband FM
(NBFM)
[When modulation index is small]

Wideband FM
(WBFM)
[When modulation index is large]

Comparison between Narrowband and Wideband FM

Sr. No.	Parameter	NBFM	WBFM
1.	Modulation index	Less than or slightly greater than 1	Greater than 1
2.	Maximum deviation	5 kHz	75 kHz
3.	Range of modulating frequency	20 Hz to 3 kHz	20 Hz to 15 kHz
4.	Maximum modulation index	Slightly greater than 1	5 to 2500
5.	Bandwidth	Small approximately same as that of AM $BW = 2f_m$	Large about 15 times greater than that of NBFM. $BW = 2(\delta + fmmax)$
6.	Applications	FM mobile communication like police wireless, ambulance, short range ship to shore communication etc.	Entertainment broadcasting (can be used for high quality music transmission)

Representation of FM

FM can be represented by two ways:

1. Time domain.
2. Frequency domain.

1.FM in Time Domain

Time domain representation means continuous variation of voltage with respect to time as shown in Fig.

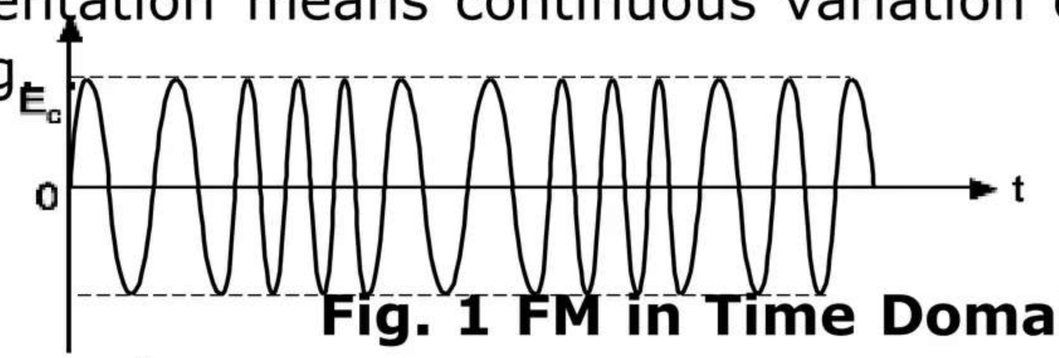

Fig. 1 FM in Time Domain

2.FM in Frequency Domain

- Frequency domain is also known as **frequency spectrum.**
- FM in frequency domain means graph or plot of amplitude versus frequency as shown in Fig. 2.29.

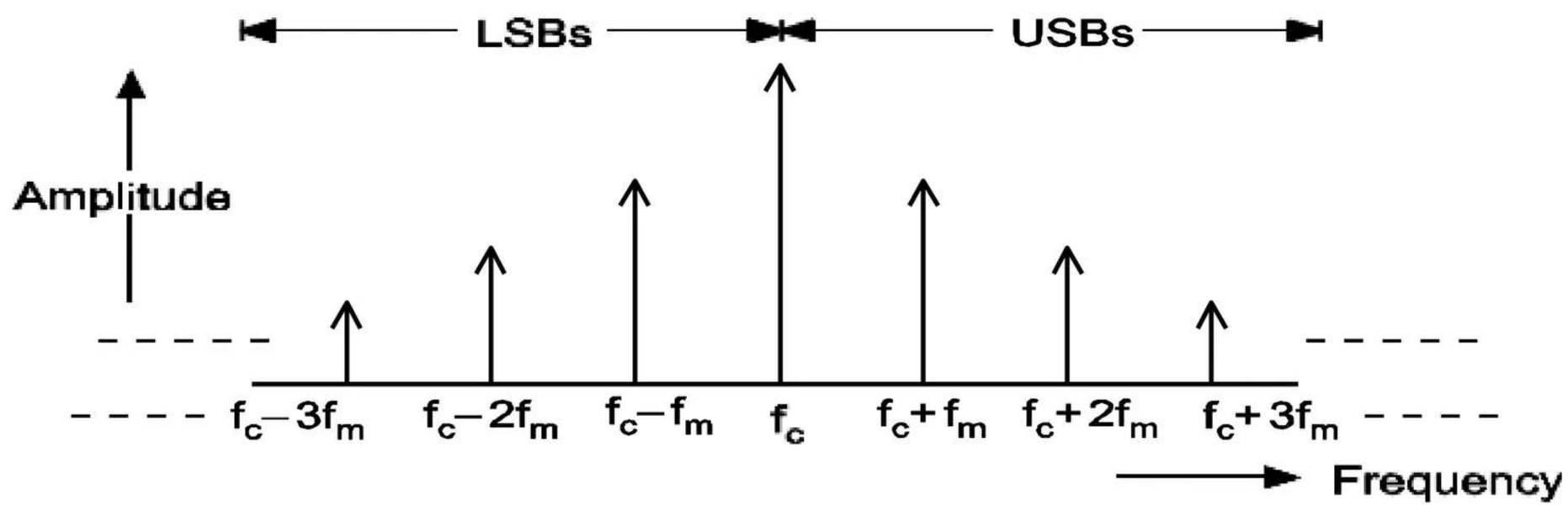

Fig. 2: FM in Frequency Domain

Pre-emphasis and De-emphasis

- Pre and de-emphasis circuits are used only in frequency modulation.
  - Pre-emphasis is used **at transmitter** and de-emphasis **at receiver**.

1. Pre-emphasis

- In FM, the noise has a greater effect on the higher modulating frequencies.
- This effect can be reduced by increasing the value of modulation index (m_f), for higher modulating frequencies.
- This can be done by increasing the deviation 'δ' and 'δ' can be increased by increasing the amplitude of modulating signal at higher frequencies.

Definition:

The artificial boosting of higher audio modulating frequencies in accordance with prearranged response curve is called pre-emphasis.

- Pre-emphasis circuit is a high pass filter as shown in Fig.

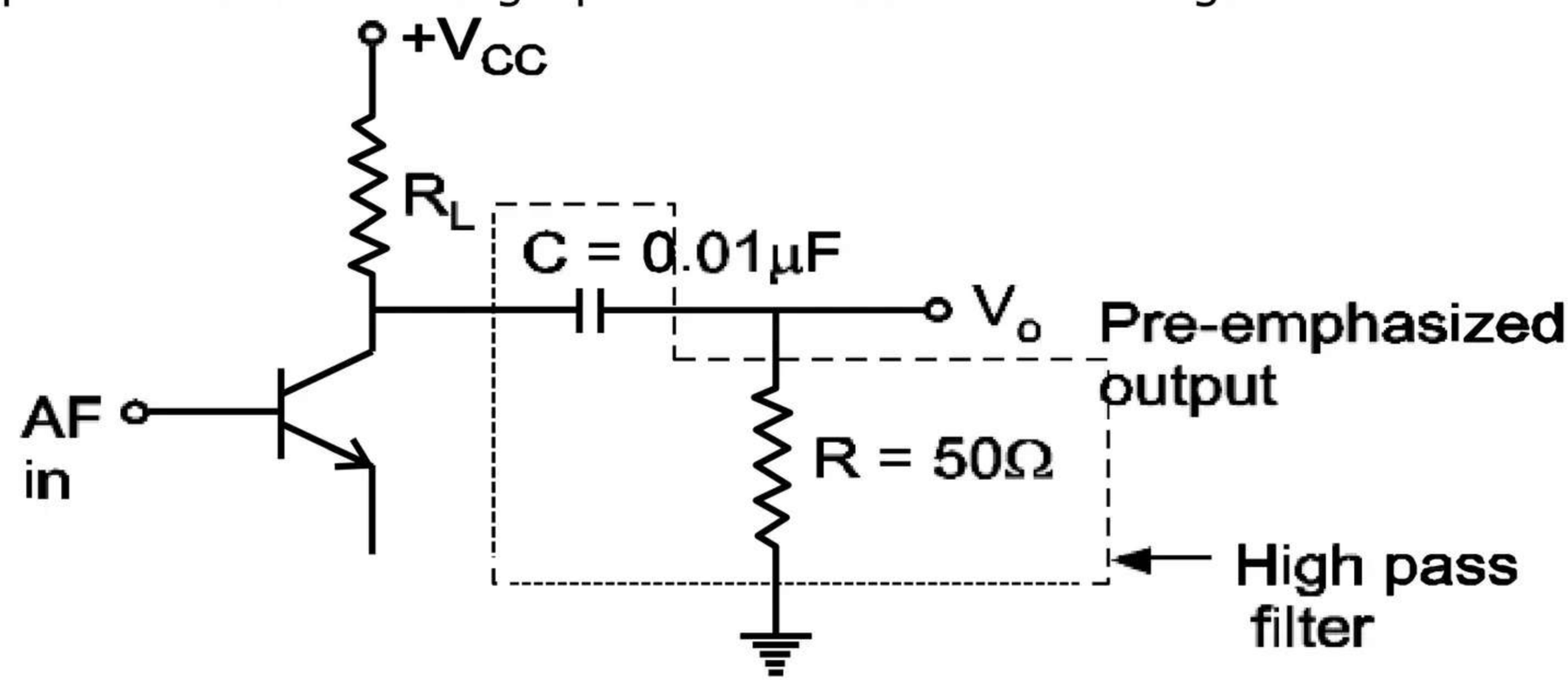

As shown in Fig. 1, AF is passed through a high-pass filter, before applying to FM modulator.

- As modulating frequency (f_m) increases, capacitive reactance decreases and modulating voltage goes on increasing.

$f_m \propto$ Voltage of modulating signal applied to FM modulat

Boosting is done according to pre-arranged curve as shown in Fig. 2.

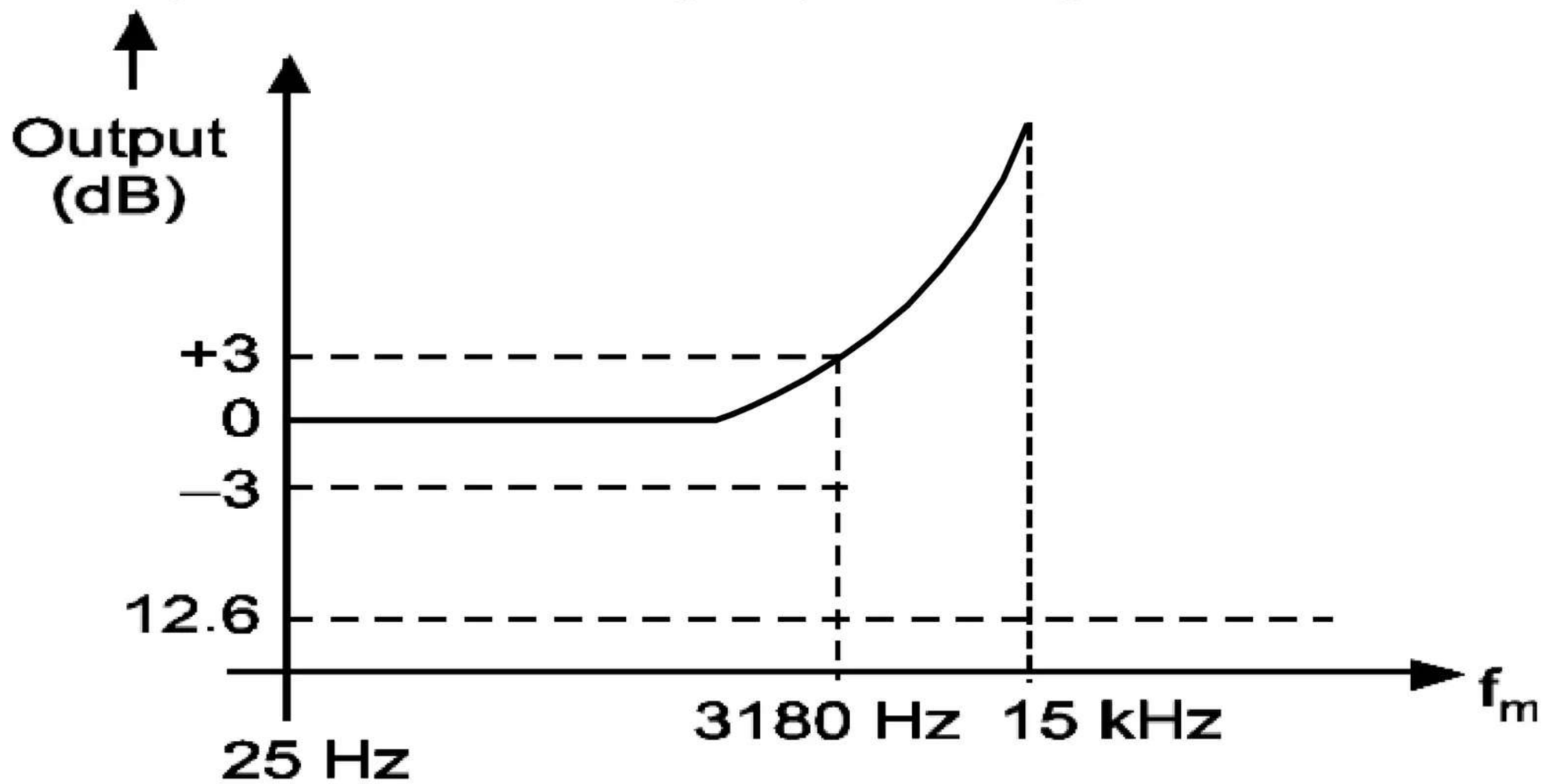

Fig. 2: P re-emphasis Curve

•

The time constant of pre-emphasis is at 50 μs in all CCIR standards.

- In systems employing American FM and TV standards, networks having time constant of 75 μsec are used.
- **The pre-emphasis is used at FM transmitter** as shown in Fig.

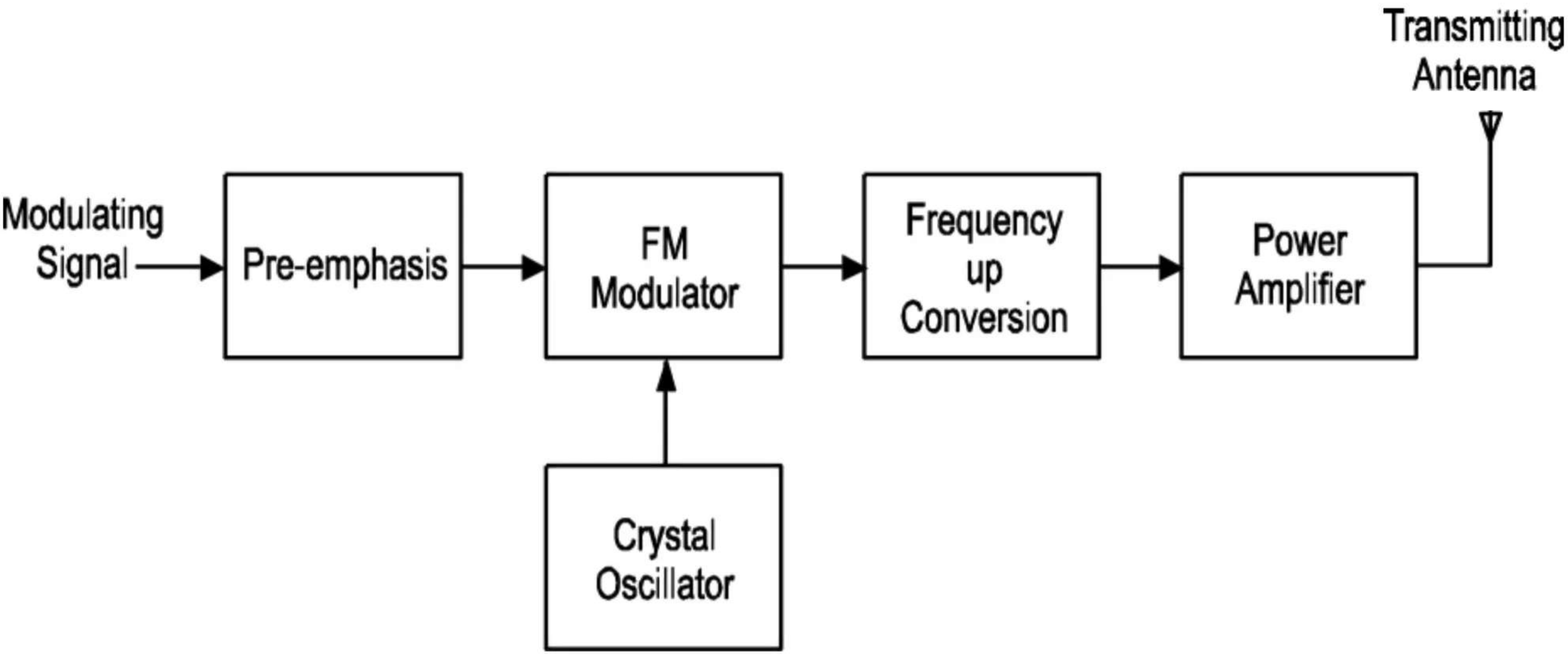

Fig. FM Transmitter with Pre-emphasis

De-emphasis

- De-emphasis circuit is **used at FM receiver**.

Definition:

The artificial boosting of higher modulating frequencies in the process of pre-emphasis is nullified at receiver by process called de-emphasis.

- De-emphasis circuit is a low pass filter shown in Fig.

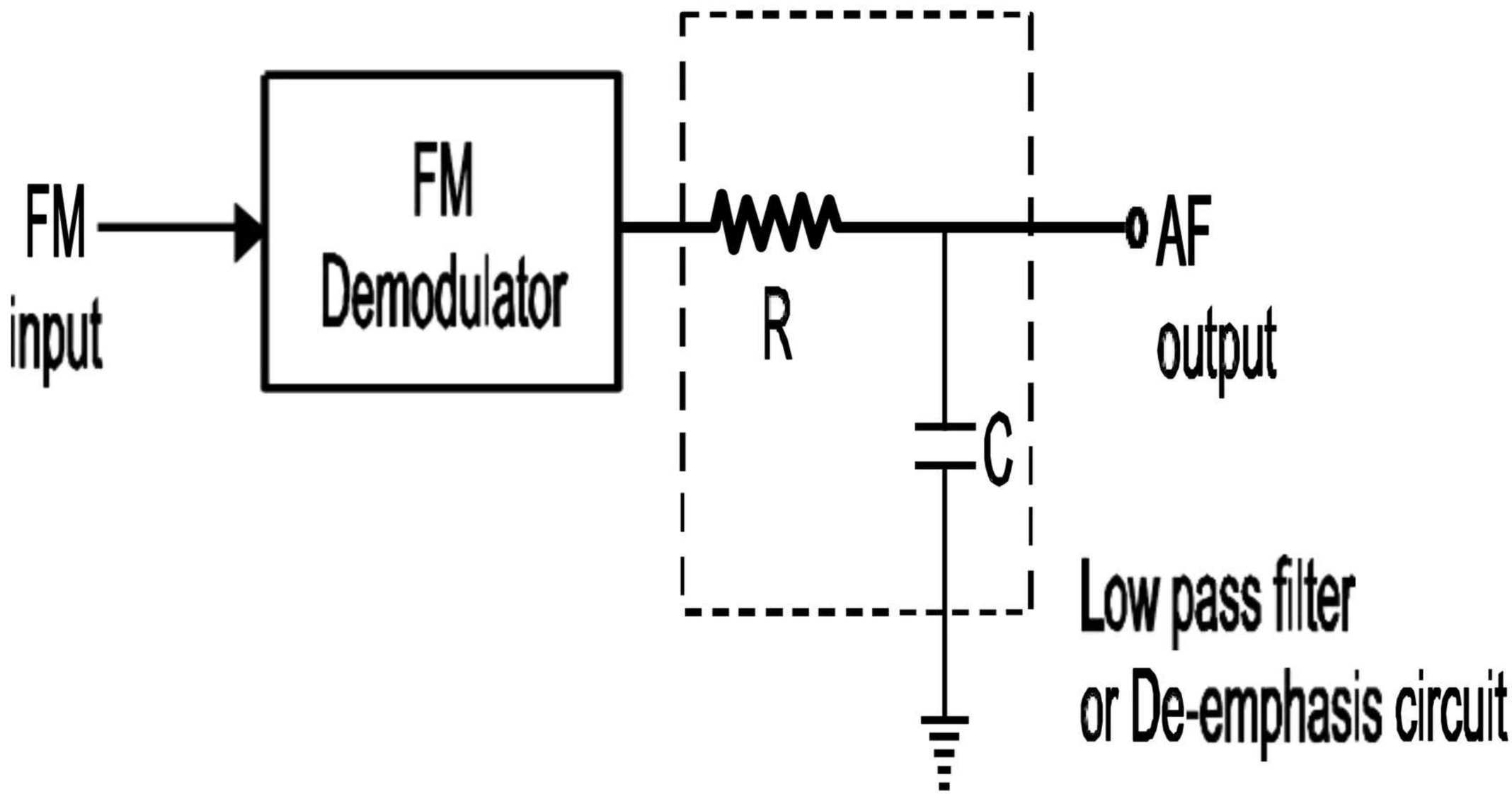

Fig. De-emphasis Circuit

Fig. De-emphasis Curve

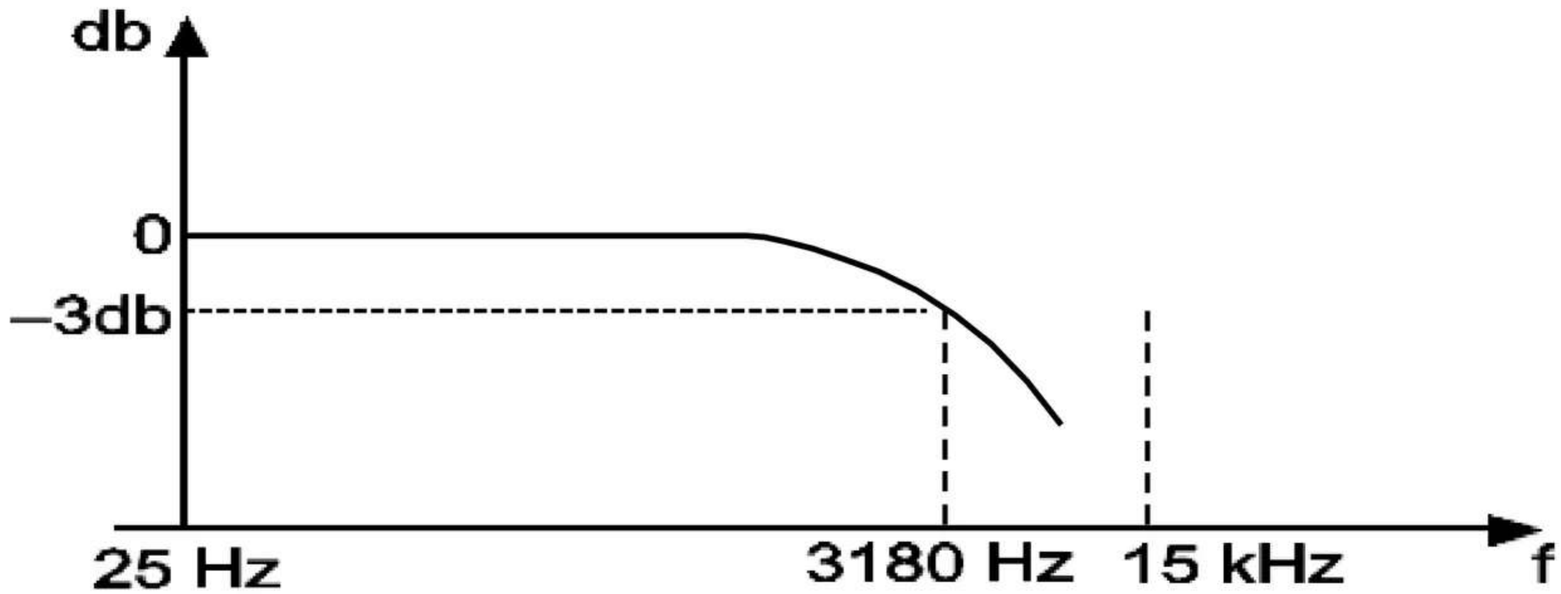

As shown in Fig.5, de-modulated FM is applied to the de-emphasis circuit (low pass filter) where with increase in f_m, capacitive reactance X_c decreases. So that output of de-emphasis circuit also reduces •

Fig. 5 shows the de-emphasis curve corresponding to a time constant

50 μs. A 50 μs de-emphasis corresponds to a frequency response curve that is 3 dB down at frequency given by,

$$f = 1/ 2\pi RC$$
$$= 1/ 2\pi \times 50 \times 1000$$
$$= 3180 \text{ Hz}$$

Comparison between Pre-emphasis and De-emphasis

Parameter	Pre-emphasis	De-emphasis
1. Circuit used	High pass filter.	Low pass filter.
2. Circuit diagram	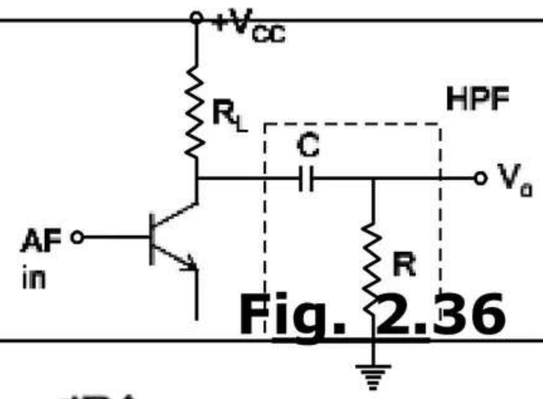 Fig. 2.36	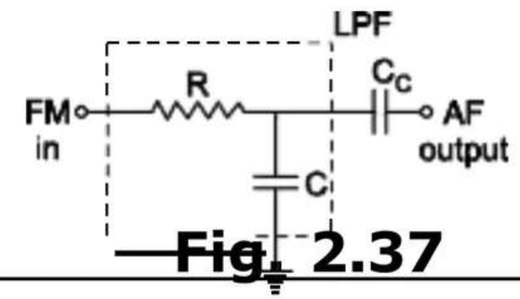 Fig. 2.37
3. Response curve	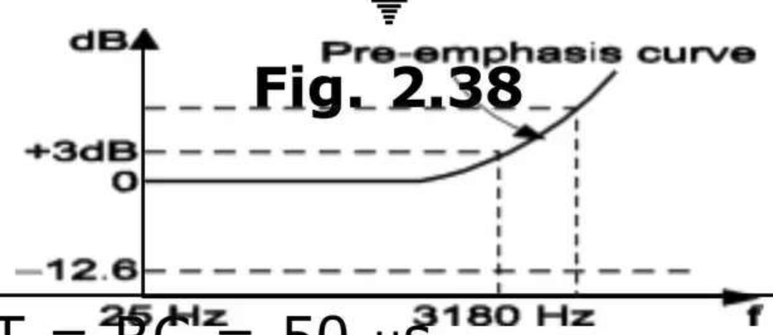 Fig. 2.38	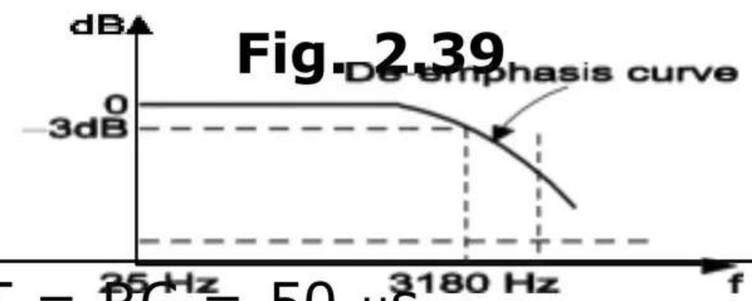 Fig. 2.39
4. Time constant	T = RC = 50 μs	T = RC = 50 μs
5. Definition	Boosting of higher frequencies	Removal of higher frequencies
6. Used at	FM transmitter	FM receiver.

Comparison between AM and FM

Parameter	AM	FM
1. Definition	Amplitude of carrier is varied in accordance with amplitude of modulating signal keeping frequency and phase constant.	Frequency of carrier is varied in accordance with the amplitude of modulating signal keeping amplitude and phase constant.
2. Constant parameters	Frequency and phase.	Amplitude and phase.
3. Modulated signal	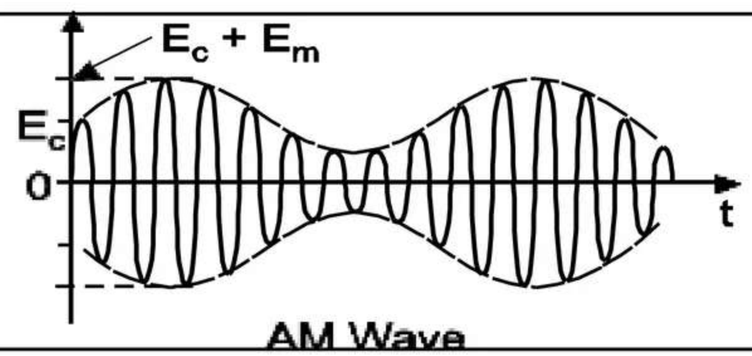	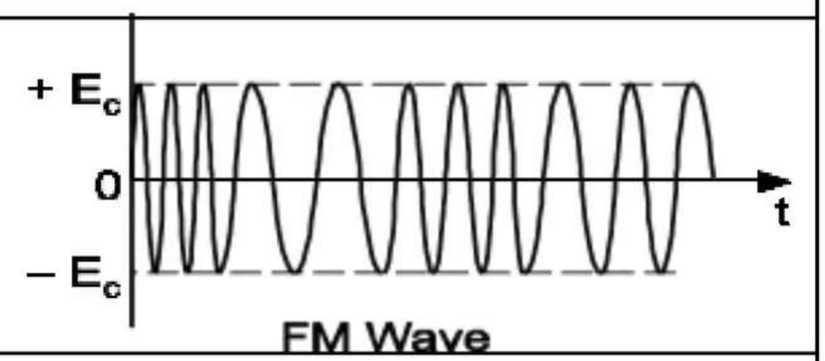
4. Modulation Index	m=Em/Ec	m = δ/ fm
5. Number of sidebands	Only two	Infinite and depends on m_f.
6. Bandwidth	BW = $2f_m$	BW = 2 (δ + $f_{m\ (max)}$)
7. Application	MW, SW band broadcasting, video transmission in TV.	Broadcasting FM, audio transmission in TV.

FM GENERATION

There are two methods for generation of FM wave.

Generation of FM

- Direct Method
  1. Reactance Modulator
  2. Varactor Diode
- Indirect Method
  1. Armstrong Method

Reactance Method

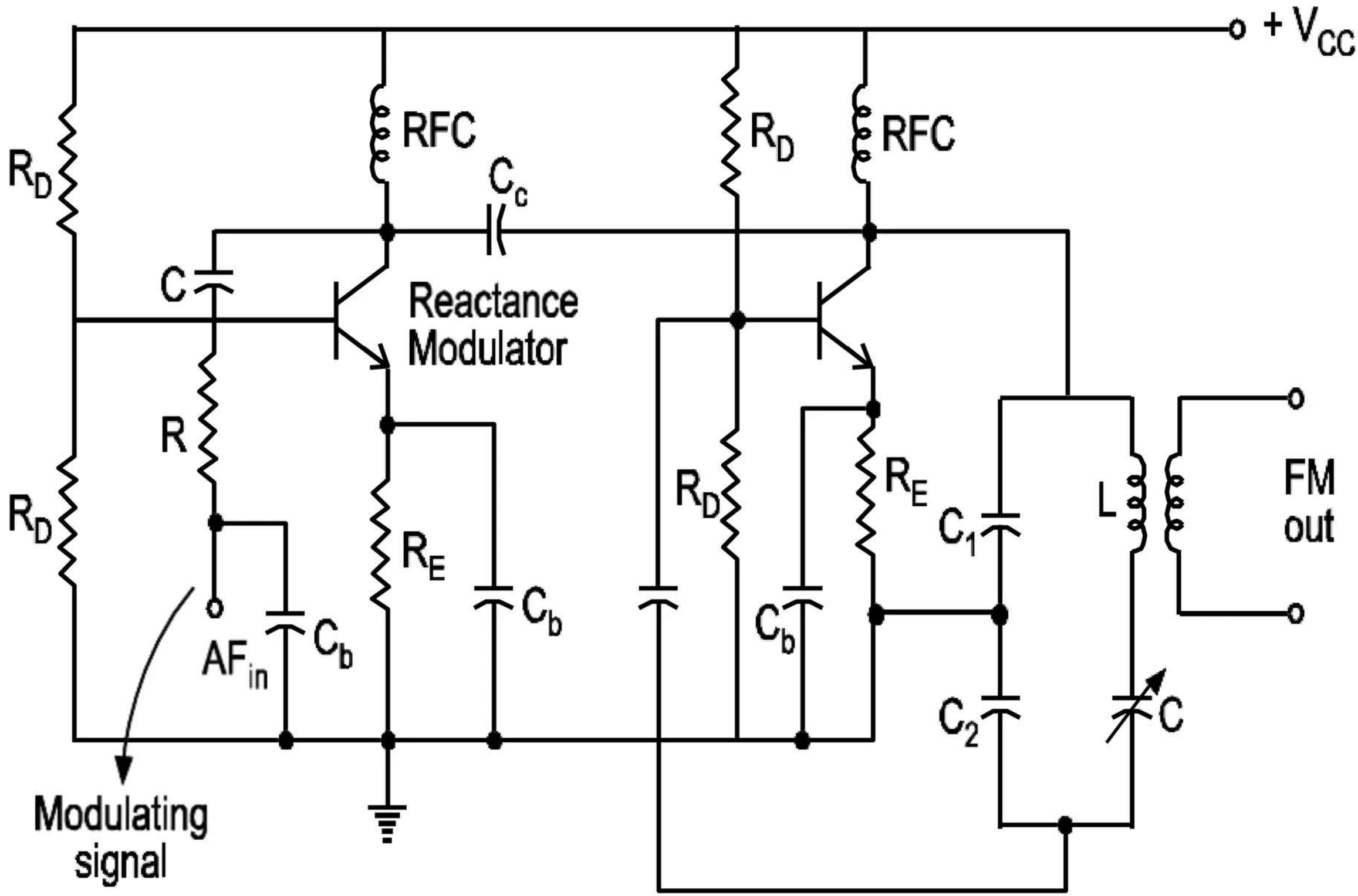

Fig. : Transistorized Reactance Modulator

Varactor Diode Modulator

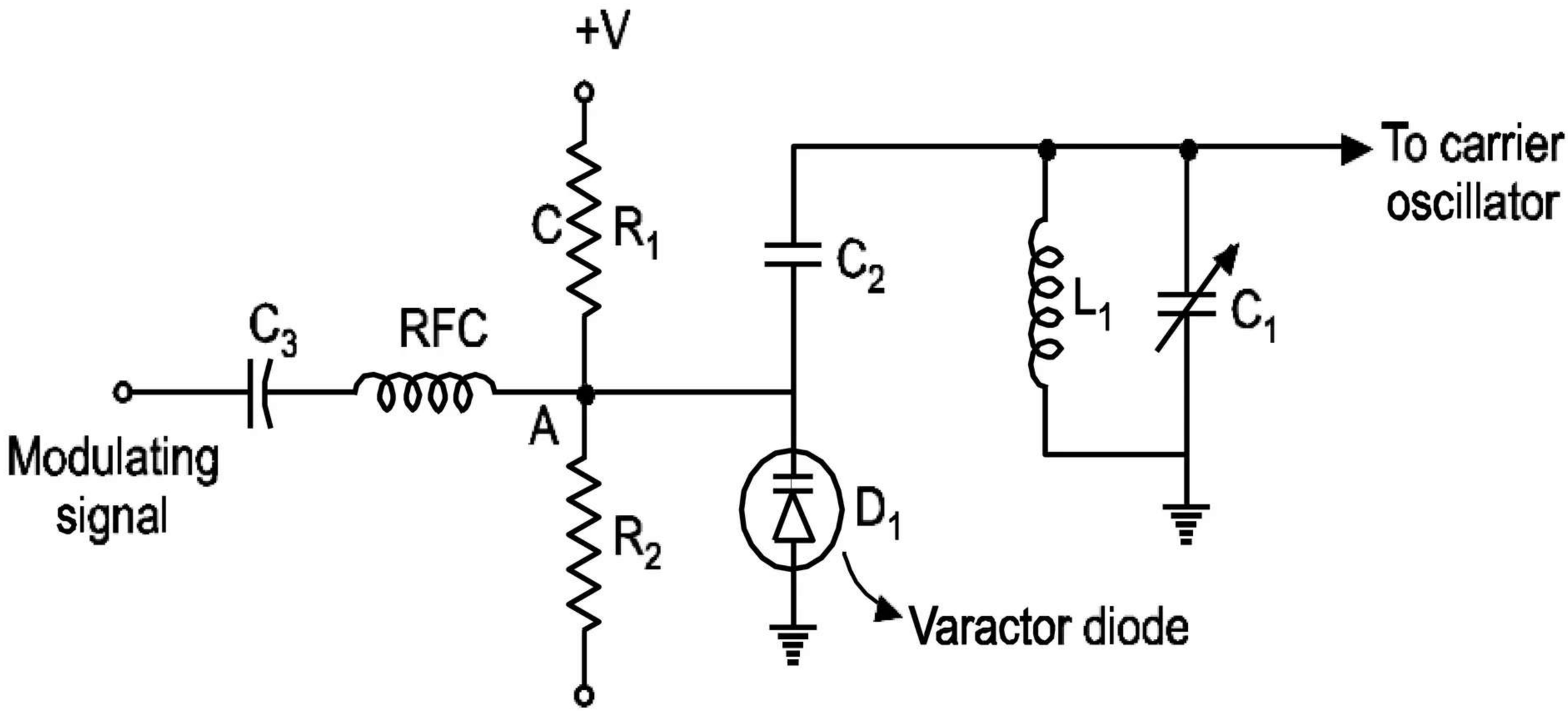

Fig. : Varactor Diode Frequency Modulator

Limitations of Direct Method of FM Generation

1. In this method, it is very difficult to get high order stability in carrier frequency because in this method the basic oscillator is not a stable oscillator, as it is controlled by the modulating signal.

2.Generally in this method we get distorted FM, due to non-linearity of the varactor diode.

FM Transmitter (Armstrong Method)

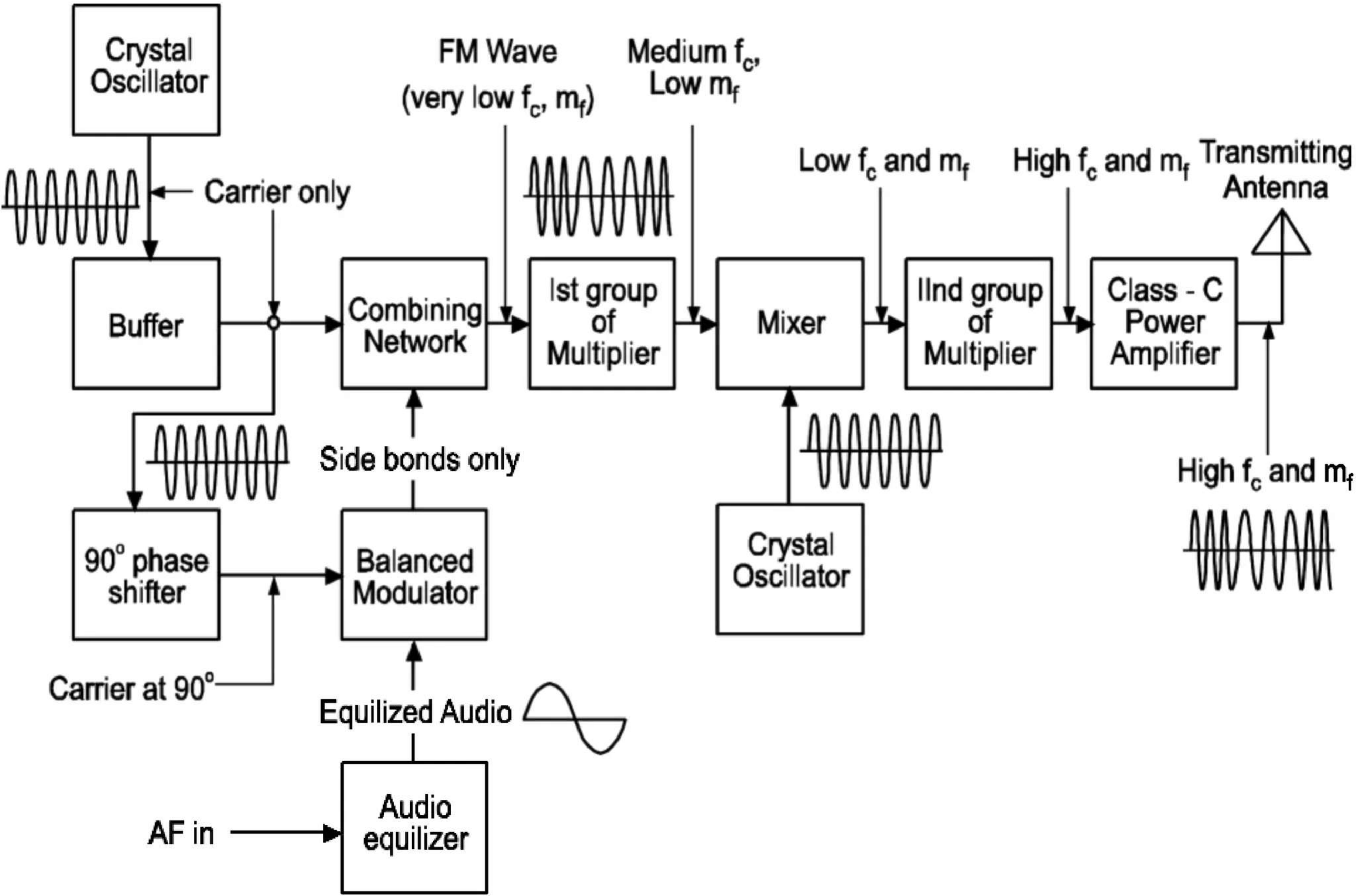

FM Generation using IC 566

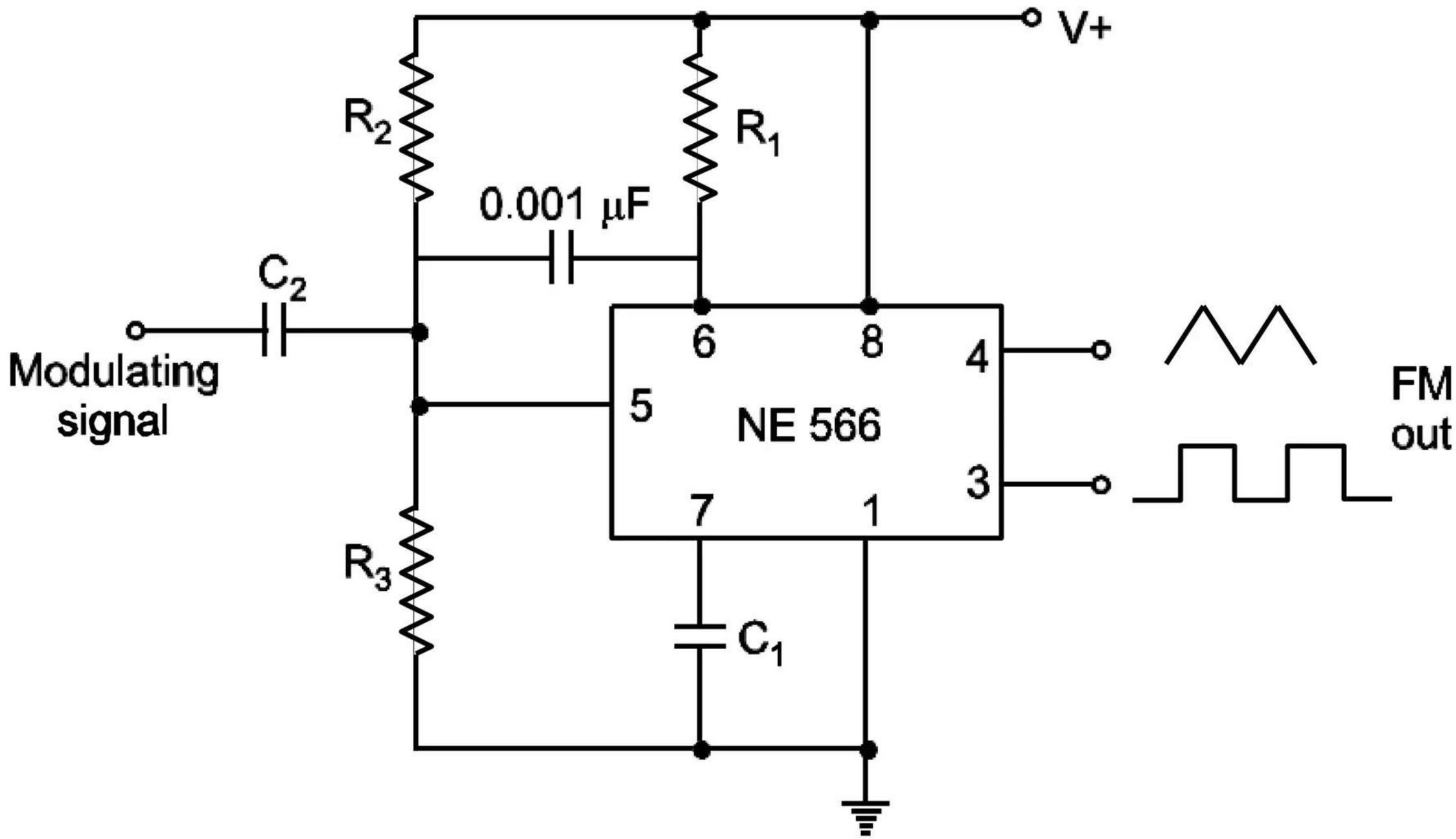

Fig. : Basic Frequency Modulator using NE566 VCO

Advantages/ Disadvantages/Applications of FM

Advantages of FM

1. Transmitted power remains constant.
2. FM receivers are immune to noise.
3. Good capture effect.
4. No mixing of signals.

Disadvantages of FM

The greatest disadvantages of FM are:

1. It uses too much spectrum space.
2. The bandwidth is wider.
3. The modulation index can be kept low to minimize the bandwidth used.
4. But reduction in M.I. reduces the noise immunity.
5. Used only at very high frequencies.

Applications of FM

1. FM radio broadcasting.
2. Sound transmission in TV.
3. Police wireless.

Demodulation of FM Signal

Two steps involved in FM demodulation

- Conversion of FM signal into AM signal, Tank or parallel resonance circuit converts FM into AM signal.
- An envelope detector is used to extract modulating signal from modulated signal.

Slope Demodulator:

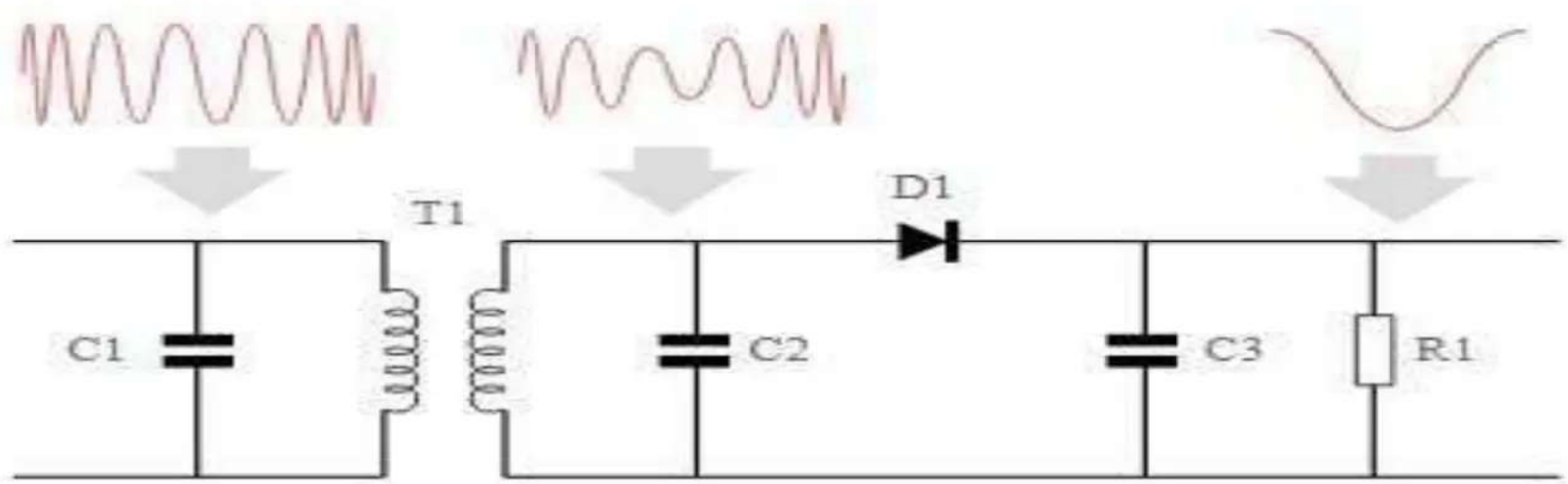

FM slope detector circuit showing the signal waveforms